Pitch:2.54*2.54mm(0.1"*0.1")
Box Header With Latches Straight Dip Type

BHAXX Series

Technical Data

Material:
Contact material: Brass
Insulator material:Black polyester UL94V-0
Standard:PBT+30%G.F

Electrical:
Current rating: 3Amps/contact max.
Contact resistance: ≤20mΩ/contact
Insulation resistance: ⩾1000MΩ at V=100V
Withstanding voltage:550V AC/minute

Mechanical:
Operating temperatures: Gold plated:-55° C to+105° C
Tin plated:-40° C to+105° C
Soldering temperature: +220° C,10s max.

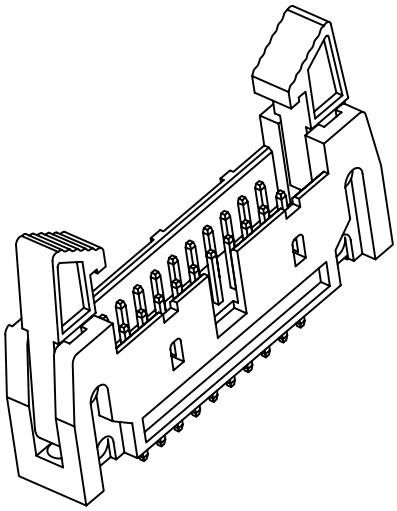

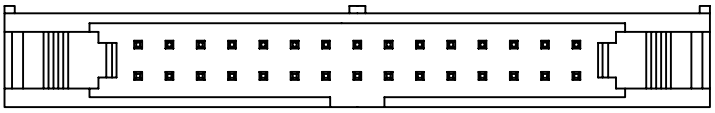

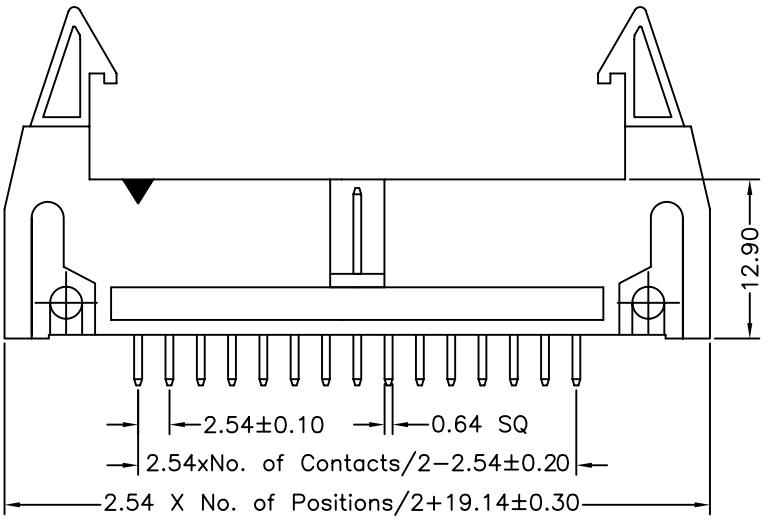

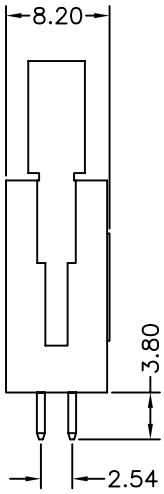

Recommended
P.C.B Board
Hole Layout

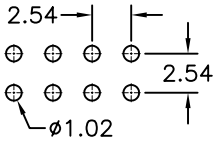

BHA	XX	-	X	X	B	XX
	No. of Positions 06 to 64		Plating Option A G/F B Au3μ" C Au5μ" D Au10μ" E Au15μ" S Special	Insulator Material Option A BK-PBT B BK-PA66 C BK-PA6T D BK-PA46 F BK-LCP S Special		Pin Length 01~99